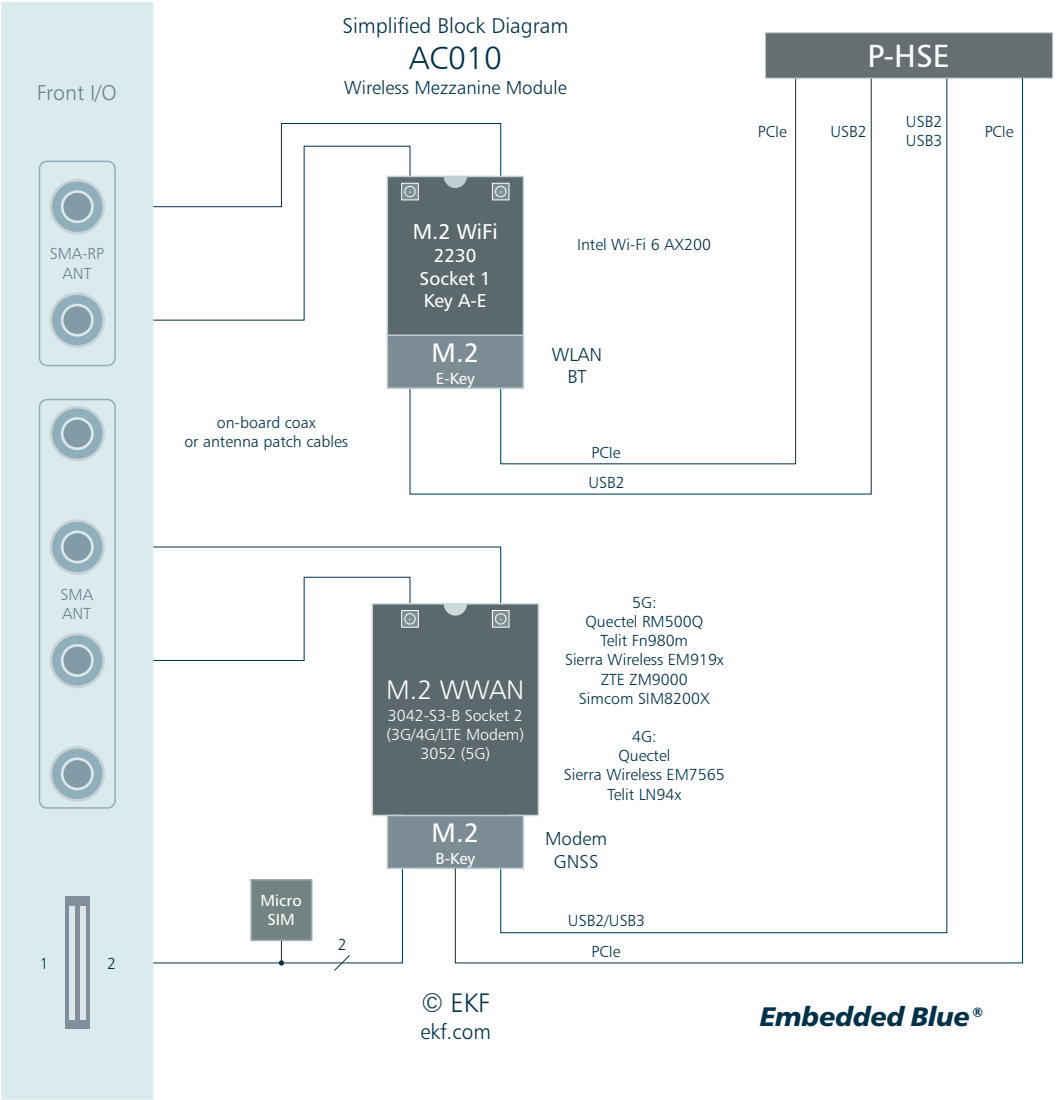
Simplified Block Diagram
AC010
Wireless Mezzanine Module
Front I/O
SMA-RP
ANT
SMA
ANT
1
2
P-HSE
PCIe
USB2
USB2
USB3
PCIe
M.2 WiFi
2230
Socket 1
Key A-E
M.2
E-Key
Intel Wi-Fi 6 AX200
WLAN
BT
on-board coax
or antenna patch cables
PCIe
USB2
M.2 WWAN
3042-S3-B Socket 2
(3G/4G/LTE Modem)
3052 (5G)
5G:
Quectel RM500Q
Telit Fn980m
Sierra Wireless EM919x
ZTE ZM9000
Simcom SIM8200X
4G:
Quectel
Sierra Wireless EM7565
Telit LN94x
M.2
B-Key
Modem
GNSS
Micro
SIM
2
USB2/USB3
PCIe
© EKF
ekf.com
Embedded Blue®